MANKO

250xpt-2

2-1/2" X 4-5/8" (2-1/2" B.M.) HIGH PERFORMANCE THERMAL CURTAIN WALL STANDARD / OPTIONAL DETAILS

* MINIMUM RECOMMENDED FOR THERMAL ISOLATION. INCREASE AS REQUIRED TO COMPLY WITH SEALANT MANUFACTURERS' INSTRUCTIONS

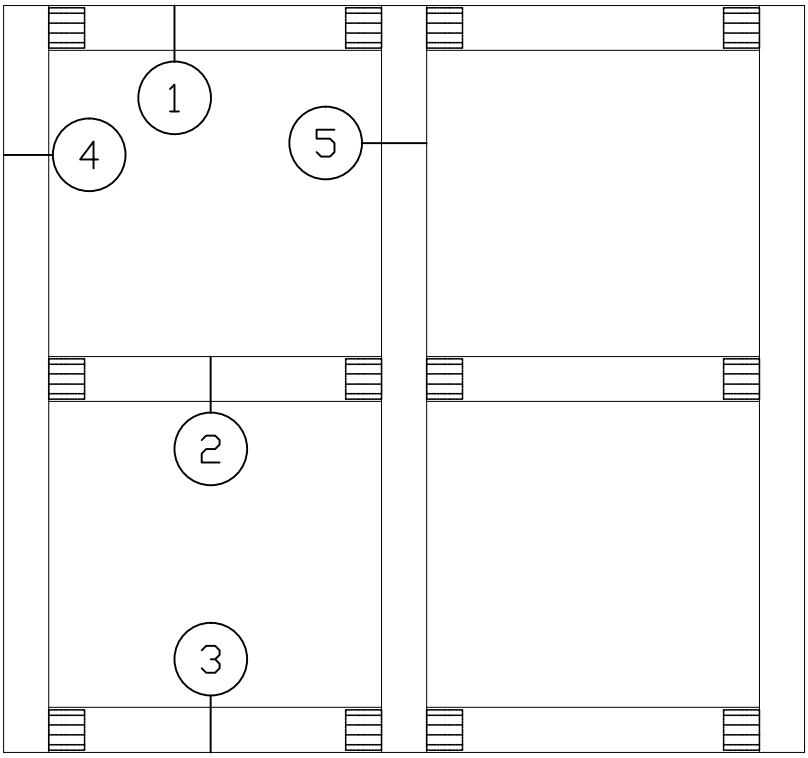

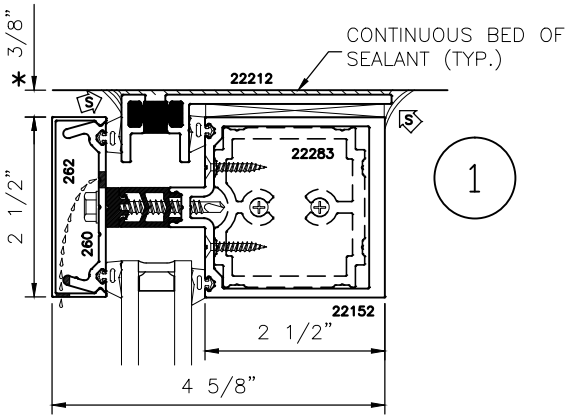

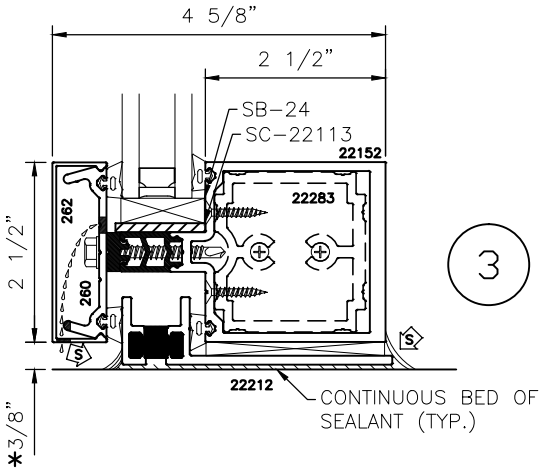

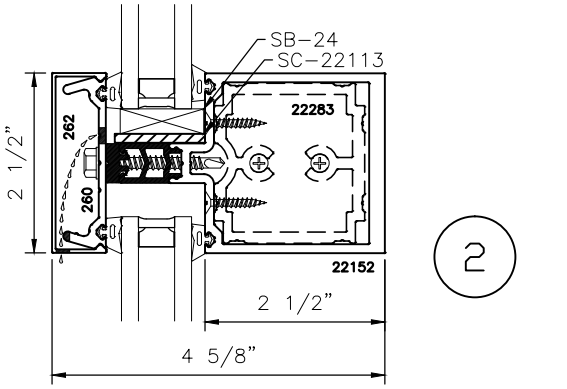

MANKO

250xpt-2

2-1/2" X 4-5/8" (2-1/2" B.M.) HIGH PERFORMANCE THERMAL CURTAIN WALL STANDARD / OPTIONAL DETAILS

* MINIMUM RECOMMENDED FOR THERMAL ISOLATION. INCREASE AS REQUIRED TO COMPLY WITH SEALANT MANUFACTURERS' INSTRUCTIONS

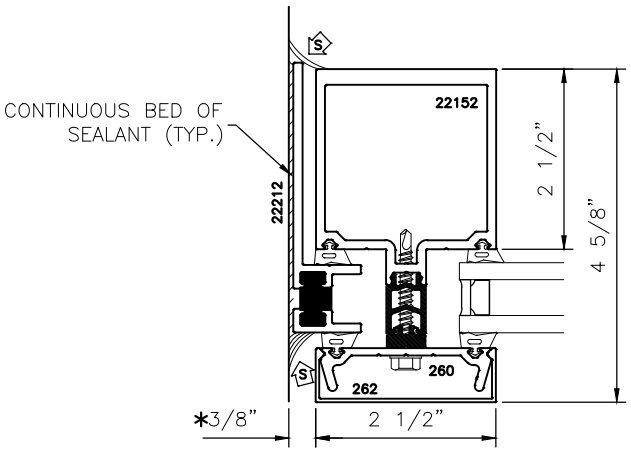

4

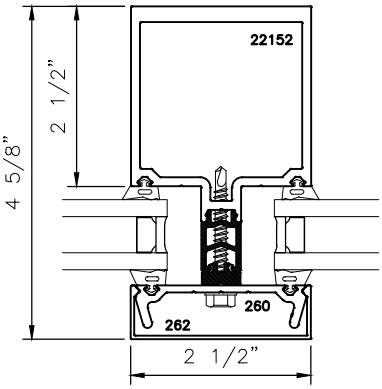

5